Ex Stainless steel flange enclosures ProtEx

- Top quality stainless steel flange enclosure for aggressive environments
- Empty enclosure for individual fittings or Ex e / Ex ia junction box
- Standard with 1 flange, optional up to 4 flanges
- Welded mounting brackets
- Standard version grinded, optional electro-polished or painted

Technical Data

Explosion protection

Ex II 2 G
Ex II 2 D
Ex e II T6 (increased safety)
Ex ia IIC T6 (intrinsic safety)
Ex e (ia) IIC T6 (mixed fitting)

Certificates

IECEx PTB 07.0059U, PTB 00 ATEX 1101U, Gost R, INMETRO MC AEX-8298-U, Gost K
IECEx PTB 07.0060, PTB 00 ATEX 1052, INMETRO MC AEX-8504-X, Gost R, Gost K
S-XPL/12.0777

Material

Stainless steel 1,5 mm, 1.4404/316L, flange plate: 3,0 mm, 1.4404/316L

Surface

Standard version grinded, optional electro-polished or painted

Ingress protection

IP 66 to EN 60529

Impact resistance

7 Joule to EN 60079-0

Temperature range

-20°C to +40°C (corresponds T6 = 85°C max. surface temperature)
-20°C to +55°C (corresponds T5 = 100°C max. surface temperature)
-20°C to +90°C (corresponds T4 = 135°C max. surface temperature)
to -55°C with special marking on request

Included in delivery

Empty enclosure:
Enclosure with hinged lid, flange plates (3 mm) silicone lid seal, silicone flange seal, welded external brackets, external earth bolt M10, internal fixing bolts, from enclosure type 9 with lid lifting device
Junction box:
Enclosure system - as before with individual fitting, DIN rail, terminals, cable glands

Product range

Order No. Ex e	Ex ia	empty enclosure	enclosure size	no. of flanges	flange type side B	dimensions (mm) H x W x D
35.06 02 00	**36.06 02 00**	**34.06 02 00**	02	1	F2	260 x 260 x 205
35.06 03 00	**36.06 03 00**	**34.06 03 00**	03	1	F3	306 x 306 x 205
35.06 04 00	**36.06 04 00**	**34.06 04 00**	04	1	F2	380 x 260 x 205
35.06 05 00	**36.06 05 00**	**34.06 05 00**	05	1	F4	458 x 382 x 205
35.06 06 00	**36.06 06 00**	**34.06 06 00**	06	1	F6	480 x 480 x 205
35.06 07 00	**36.06 07 00**	**34.06 07 00**	07	1	F4	500 x 350 x 205
35.06 08 00	**36.06 08 00**	**34.06 08 00**	08	1	F6	620 x 450 x 205
35.06 09 00	**36.06 09 00**	**34.06 09 00**	09	1	F7	740 x 550 x 205
35.06 10 00	**36.06 10 00**	**34.06 10 00**	10	1	F6	762 x 508 x 205
35.06 11 00	**36.06 11 00**	**34.06 11 00**	11	2	F3	860 x 640 x 205
35.06 12 00	**36.06 12 00**	**34.06 12 00**	12	2	F3	914 x 610 x 205
35.06 13 00	**36.06 13 00**	**34.06 13 00**	13	2	F4	980 x 740 x 205

electro-polished version: 34/35/36.04 xx xx

Accessories

Order No.	
34.06 50 02	Blind flange F1 165 x 139 fitting area
34.06 50 03	Blind flange F2 211 x 139 fitting area
34.06 50 04	Blind flange F3 266 x 139 fitting area
34.06 50 05	Blind flange F4 310 x 139 fitting area
34.06 50 06	Blind flange F5 363 x 139 fitting area
34.06 50 07	Blind flange F6 405 x 139 fitting area
34.06 50 08	Blind flange F7 510 x 139 fitting area
34.06.50 09	Blind flange F8 645 x 139 fitting area
34.04 51 02	Mounting plate for type 02
34.04 51 03	Mounting plate for type 03
34.04 51 04	Mounting plate for type 04
34.04 51 05	Mounting plate for type 05
34.04 51 06	Mounting plate for type 06
34.04 51 07	Mounting plate for type 07
34.04 51 08	Mounting plate for type 08
34.04 51 09	Mounting plate for type 09
34.04 51 10	Mounting plate for type 10
34.04 51 11	Mounting plate for type 11
34.04 51 12	Mounting plate for type 12
34.04 51 13	Mounting plate for type 13

Version with rain protection roof and document case on request
Rail fixing set on request

For further technical informations see page 90 ff

Ex Stainless steel flange enclosures ProtEx

Terminal mounting

Make	Phoenix																
DIN rail TS 15				X	X			X									
DIN rail TS 32																	
DIN rail TS 35	X	X	X			X	X		X	X	X	X	X	X	X		
Voltage (V)	352	550	690	275	420	690	690	275	690	690	690	690	880	1100	1100		
Current (A)	17	22	23	22,5	27	32,5	43,5	37	57	74	118,5	137	216	256	350		
Nominal cross section (mm²)	1,5	2,5	2,5	2,5	4	4	6	6	10	16	35	50	95	150	240		
Terminal width (mm)	4,2	5,2	5,2	5,2	6,2	6,2	8,2	8,2	10,2	12,2	16	20	25	31	36		
Terminal Type / Enclosure Type	UK 1,5 N	UK 2,5 N	UK 3 N	MKB 3/E-Z	MXK 4	UK 5 N	UK 6 N	MBK 6/E	UK 10 N	UK 16 N	UK 35	UKH 50	UKH 95	UKH 150	UKH 240		
34/35/36.06 02 00	99	81	81	81	66	66	51	51	26	22	9	7					
34/35/36.06 03 00	176	144	144	144	90	90	66	66	54	30	12	9	7				
34/35/36.06 04 00	186	150	150	150	126	126	93	93	52	42	18	13	5				
34/35/36.06 05 00	400	325	325	325	252	252	192	192	132	84	44	26	13	8	7		
34/35/36.06 06 00	602	483	483	483	348	348	264	264	175	116	69	36	14	11	10		
34/35/36.06 07 00	450	365	365	365	244	244	184	184	111	93	50	22	15	7	6		
34/35/36.06 08 00	714	576	576	576	424	424	320	320	196	164	84	50	26	16	13		
34/35/36.06 09 00	1184	952	952	952	700	700	525	525	300	250	120	63	34	20	17		
34/35/36.06 10 00	1071	861	861	861	620	620	470	470	315	217	126	64	30	20	17		
34/35/36.06 11 00	1612	1300	1300	1300	952	952	720	720	459	360	192	111	60	32	28		
34/35/36.06 12 00	1701	1377	1377	1377	1024	1024	776	776	468	325	208	117	62	30	26		
34/35/36.06 13 00	2255	1815	1815	1815	1300	1300	975	975	600	490	240	155	72	40	34		

PE terminal as required

Make	Weidmüller																						
DIN rail TS 15	X	X	X	X																			
DIN rail TS 32							X	X		X		X		X			X						
DIN rail TS 35					X	X			X		X		X		X	X		X	X	X	X	X	X
Voltage (V)	275	176	176	275	440	550	550	550	690	550	550	550	550	690	690	690	550	690	690	690	880	1100	1100
Current (A)	14	10	15	21	21	21	21	28	28	36	36	50	50	66	66	109	109	126	167	202	243	234	300
Nominal cross section (mm²)	1,5	1,5	2,5	4	2,5	2,5	2,5	4	4	6	6	10	10	16	16	35	35	50	70	95	120	150	240
Terminal width (mm)	3,5	5,1	5,1	6,1	5,1	5,1	6	6,5	6,1	8	7,9	10	9,9	12	11,9	16	18	18,5	20,5	27	27	32	36
Terminal Type / Enclosure Type	WDU 1,5 / R 3,5/E	AKZ 1,5	AKZ 2,5	AKZ 4	WDU 2,5 N	WDU 2,5	SAK 2,5	SAK 4	WDU 4	SAK 6N	WDU 6	SAK 10	WDU 10	SAK 16	WDU 16	WDU 35	SAK 35	WDU 50N	WDU 70N	WDU 70/95	WDU 95N/120N	WDU 120/150	WDU 240
34/35/36.06 02 00	129	87	87	75	87	87	75	75	75	57	57	30	30	24	24	9	8	11					
34/35/36.06 03 00	224	156	156	96	156	156	96	96	96	72	72	57	57	32	32	12	11	14	9	7			
34/35/36.06 04 00	215	150	150	100	150	150	100	100	100	76	76	60	60	36	36	18	18	18	7	5			
34/35/36.06 05 00	390	265	265	180	265	265	180	180	180	136	136	108	108	66	66	34	30	36	13	10	10	8	9
34/35/36.06 06 00	430	365	365	305	365	365	305	305	305	184	184	148	148	124	124	69	60	46	36	36	13	11	12
34/35/36.06 07 00	345	235	235	195	235	235	195	195	195	120	120	72	72	60	60	45	39	32	22	9	9	7	8
34/35/36.06 08 00	990	693	693	512	693	693	512	392	392	392	392	234	234	160	160	96	84	66	38	28	14	12	11
34/35/36.06 09 00	1386	946	946	648	946	946	803	612	612	495	495	308	308	252	252	108	96	81	63	32	32	13	14
34/35/36.06 10 00	1254	858	858	650	858	858	726	610	610	500	500	320	320	231	231	125	110	75	57	28	28	12	13
34/35/36.06 11 00	2054	1352	1352	957	1352	1352	1196	902	902	726	726	477	477	352	352	165	145	132	78	57	38	32	32
34/35/36.06 12 00	2002	1372	1372	984	1372	1372	1148	924	924	744	744	450	450	328	328	186	162	138	72	54	36	30	30
34/35/36.06 13 00	2700	1860	1860	1339	1860	1860	1545	1261	1261	1027	1027	630	630	468	468	234	210	185	120	69	46	38	38

PE terminal as required

General technical data see page 12

Ex Stainless steel flange enclosures ProtEx

Type: **Ex e 35.06 02 00** **Ex ia 36.06 02 00** **34.06 02 00**

ATEX h x w x d **260 x 260 x 205 mm** **4870 g**

l in mm	in mm						
TS 35							
198	153	M10	•	•	1 (B)		

DIN 50262

A / B / C / D

	1,5	2,5	4	6	10	16	25	35	50	70	95
***	99	81	66	51	26	22	9	9	7	5	
N	3	3	3	3	2	2	1	1	1	1	
A 6											
A 10	60	108									
A 16	23	41	67								
A 20	9	25	43	72							
A 25		12	26	43							
A 35			8	20	39						
A 50				3	16	32	104				
A 63					5	18	35				
A 80						7	19	32			
A 100							9	17	32		
A 125								7	16	31	
A 160									6	14	
A 200										6	
A 225										2	
A 250											
A 315											
A 400											
A 500											

M		Side A/B*	Side C/D**	PG		Side A/B*	Side C/D**
12	17,25	98	75	7	17,25	98	75
16	25,30	43	34	9	21,85	60	45
20	27,60	34	25	11	25,30	43	34
25	37,95	18	13	13,5	27,60	34	25
32	48,30	10	7	16	31,05	28	21
40	60,95	6	4	21	37,95	18	13
50	69,00	4	4	29	48,30	10	7
63	74,75	4	2	36	60,95	6	4
				42	69,00	4	4
				48	74,75	4	2

* Standard only side B, optional side A
** Optional flange side C/D
*** Base: Terminal block Phoenix Contact, further see page 90

Type: **Ex e 35.06 03 00** **Ex ia 36.06 03 00** **34.06 03 00**

ATEX h x w x d **306 x 306 x 205 mm** **6010 g**

l in mm	in mm						
TS 35							
244	199	M10	•	•	1 (B)		

DIN 50262

A / B / C / D

	1,5	2,5	4	6	10	16	25	35	50	70	95
***	176	144	90	66	54	30	12	12	9	7	7
N	4	4	3	3	3	2	1	1	1	1	1
A 6											
A 10	64	116									
A 16	24	43	72								
A 20	10	27	46	77							
A 25		13	28	46							
A 35			9	21	41						
A 50				3	17	34	111				
A 63					6	19	37				
A 80						8	20	34			
A 100							9	18	34		
A 125								8	18	33	
A 160									7	15	27
A 200										6	13
A 225										2	8
A 250											4
A 315											
A 400											
A 500											

M		Side A/B*	Side C/D**	PG		Side A/B*	Side C/D**
12	17,25	125	98	7	17,25	125	98
16	25,30	58	43	9	21,85	77	60
20	27,60	43	34	11	25,30	58	43
25	37,95	24	18	13,5	27,60	43	34
32	48,30	13	10	16	31,05	38	28
40	60,95	8	6	21	37,95	24	18
50	69,00	6	4	29	48,30	13	10
63	74,75	6	4	36	60,95	8	6
				42	69,00	6	4
				48	74,75	6	4

* Standard only side B, optional side A
** Optional flange side C/D
*** Base: Terminal block Phoenix Contact, further see page 90

Ex Stainless steel flange enclosures ProtEx

Type: **Ex e 35.06 04 00** **Ex ia 36.06 04 00** **34.06 04 00**

ATEX h x w x d **380 x 260 x 205 mm** **6360 g**

l in mm	in mm				N		
TS 35							
198	153	M10	•	•	1 (B)		

		1,5	2,5	4	6	10	16	25	35	50	70	95	120
***		186	150	126	93	52	42	18	18	13	5	5	4
N		5	5	4	4	4	3	2	2	1	1	1	1
A	6												
	10	63	114										
	16	24	43	71									
	20	10	26	45	76								
	25		13	28	45								
	35			8	21	41							
	50				3	17	34	109					
	63					6	19	37					
	80						7	20	33				
	100							9	18	33			
	125								8	17	32		
	160									7	15	27	68
	200										6	13	21
	225										2	8	14
	250											4	10
	315												2
	400												
	500												

* Standard only side B, optional side A
** Optional flange side C/D
*** Base: Terminal block Phoenix Contact, further see page 90

N DIN 50262

A
C D
B

M		Side A/B*	Side C/D**	PG		Side A/B*	Side C/D**
12	17,25	98	125	7	17,25	98	125
16	25,30	43	58	9	21,85	60	77
20	27,60	34	43	11	25,30	43	58
25	37,95	18	24	13,5	27,60	34	43
32	48,30	10	13	16	31,05	28	38
40	60,95	6	8	21	37,95	18	24
50	69,00	4	6	29	48,30	10	13
63	74,75	4	6	36	60,95	6	8
				42	69,00	4	6
				48	74,75	4	6

Ex Stainless steel flange enclosures ProtEx

Type: **Ex e 35.06 05 00** **Ex ia 36.06 05 00** **34.06 05 00**

ATEX h x w x d **458 x 382 x 205 mm** **9120 g**

l in mm	in mm								
TS 35									
320	275	M10	•	•	1 (B)				

		1,5	2,5	4	6	10	16	25	35	50	70	95	120	150	185	240
***		400	325	252	192	132	84	44	44	26	13	13	8	8	7	7
N		5	5	4	4	4	3	2	2	2	1	1	1	1	1	1
A	6															
	10	73	133													
	16	28	50	83												
	20	12	31	52	88											
	25		15	32	53											
	35			10	24	48										
	50				3	19	39	127								
	63					7	22	43								
	80						9	23	39							
	100							11	21	39						
	125								9	20	38					
	160									8	18	31	79			
	200										7	15	25	43		
	225										2	9	17	26	53	
	250											5	11	18	29	
	315												2	7	13	23
	400														3	9
	500															

* Standard only side B, optional side A
** Optional flange side C/D
*** Base: Terminal block Phoenix Contact, further see page 90

N **DIN 50262**

A
C D
B

M		Side A/B*	Side C/D**	PG		Side A/B*	Side C/D**
12	17,25	147	179	7	17,25	147	179
16	25,30	67	79	9	21,85	91	108
20	27,60	53	63	11	25,30	67	79
25	37,95	28	34	13,5	27,60	53	63
32	48,30	16	19	16	31,05	43	53
40	60,95	8	9	21	37,95	28	34
50	69,00	8	8	29	48,30	16	19
63	74,75	6	8	36	60,95	8	9
				42	69,00	8	8
				48	74,75	6	8

Ex Stainless steel flange enclosures ProtEx

Type: **Ex e 35.06 06 00** **Ex ia 36.06 06 00** **34.06 06 00**

ATEX h x w x d **480 x 480 x 205 mm** **11010 g**

l in mm	in mm								
TS 35									
418	373	M10	•	•	1 (B)				

		1,5	2,5	4	6	10	16	25	35	50	70	95	120	150	185	240
***		602	483	348	264	175	116	69	69	36	14	14	11	11	10	10
N		5	5	5	4	4	4	3	3	2	2	2	1	1	1	1
A	6															
	10	79	144													
	16	30	54	90												
	20	13	33	57	96											
	25		16	35	57											
	35			11	27	51										
	50				4	21	43	138								
	63					7	24	46								
	80						10	25	42							
	100							11	23	42						
	125								10	22	41					
	160									8	19	34	86			
	200										8	16	27	47		
	225										3	10	18	28	57	
	250											5	12	20	32	
	315												3	7	14	25
	400														3	10
	500															

* Standard only side B, optional side A
** Optional flange side C/D
*** Base: Terminal block Phoenix Contact, further see page 90

N

DIN 50262

A
C D
B

M		Side A/B*	Side C/D**	PG		Side A/B*	Side C/D**
12	17,25	201	179	7	17,25	201	179
16	25,30	91	79	9	21,85	122	108
20	27,60	70	63	11	25,30	91	79
25	37,95	38	34	13,5	27,60	70	63
32	48,30	22	19	16	31,05	61	53
40	60,95	12	9	21	37,95	38	34
50	69,00	10	8	29	48,30	22	19
63	74,75	8	8	36	60,95	12	9
				42	69,00	10	8
				48	74,75	8	8

Ex Stainless steel flange enclosures ProtEx

Type: **Ex e 35.06 07 00** **Ex ia 36.06 07 00** **34.06 07 00**

ATEX h x w x d **500 x 350 x 205 mm** **9190 g**

l in mm	in mm								
TS 35									
288	243	M10	•	•	1 (B)				

		1,5	2,5	4	6	10	16	25	35	50	70	95	120	150	185	240
***		450	365	244	184	111	93	50	50	22	15	15	7	7	6	6
N		5	5	5	4	3	3	3	3	2	1	1	1	1	1	1
A	6															
	10	72	131													
	16	28	49	81												
	20	11	30	51	87											
	25		15	32	52											
	35			10	24	47										
	50				3	19	39	125								
	63					7	21	42								
	80						9	23	38							
	100							10	21	38						
	125								9	20	37					
	160									8	17	30	78			
	200										7	15	24	42		
	225										2	9	16	26	52	
	250											5	11	18	29	
	315												2	7	12	23
	400														3	9
	500															

* Standard only side B, optional side A
** Optional flange side C/D
*** Base: Terminal block Phoenix Contact, further see page 90

N DIN 50262

A
C D
B

M		Side A/B*	Side C/D**	PG		Side A/B*	Side C/D**
12	17,25	147	201	7	17,25	147	201
16	25,30	67	91	9	21,85	91	122
20	27,60	53	70	11	25,30	67	91
25	37,95	28	38	13,5	27,60	53	70
32	48,30	16	22	16	31,05	43	61
40	60,95	8	12	21	37,95	28	38
50	69,00	8	10	29	48,30	16	22
63	74,75	6	8	36	60,95	8	12
				42	69,00	8	10
				48	74,75	6	8

Ex Stainless steel flange enclosures ProtEx

Type: **Ex e 35.06 08 00** **Ex ia 36.06 08 00** **34.06 08 00**

ATEX h x w x d **620 x 450 x 205 mm** **12790 g**

l in mm	in mm				N				
TS 35									
438	393	M10	•	•	1 (B)				

	1,5	2,5	4	6	10	16	25	35	50	70	95	120	150	185	240
***	714	576	424	320	196	164	84	84	50	26	26	16	16	13	13
N	9	9	8	8	6	5	4	4	3	2	2	1	1	1	1
6															
10	82	149													
16	31	56	93												
20	13	34	59	99											
25		17	36	59											
35			11	27	53										
50				4	22	44	142								
63					7	25	48								
80						10	26	44							
100							12	23	43						
125								10	23	42					
160									9	20	35	88			
200										8	17	27	48		
225										3	10	19	29	59	
250											6	13	20	33	
315												3	8	14	26
400														3	10
500															

* Standard only side B, optional side A
** Optional flange side C/D
*** Base: Terminal block Phoenix Contact, further see page 90

N DIN 50262

A
C D
B

M		Side A/B*	Side C/D**	PG		Side A/B*	Side C/D**
12	17,25	201	255	7	17,25	201	255
16	25,30	91	115	9	21,85	122	154
20	27,60	70	88	11	25,30	91	115
25	37,95	38	48	13,5	27,60	70	88
32	48,30	22	28	16	31,05	61	76
40	60,95	12	16	21	37,95	38	48
50	69,00	10	14	29	48,30	22	28
63	74,75	8	12	36	60,95	12	16
				42	69,00	10	14
				48	74,75	8	12

Ex Stainless steel flange enclosures ProtEx

Type: **Ex e 35.06 09 00** **Ex ia 36.06 09 00** **34.06 09 00**

ATEX h x w x d **740 x 550 x 205 mm** **18200 g**

l in mm	in mm								
TS 35									
488	443	M10	•	•	1 (B)				

		1,5	2,5	4	6	10	16	25	35	50	70	95	120	150	185	240
***		1184	952	700	525	300	250	120	120	63	34	34	20	20	17	17
N		11	11	9	9	7	7	4	4	3	2	2	1	1	1	1
A	6															
	10	92	167													
	16	35	63	104												
	20	15	39	66	111											
	25		19	41	66											
	35			12	31	60										
	50				4	24	49	159								
	63					8	27	54								
	80						11	29	49							
	100							13	26	49						
	125								12	25	47					
	160									10	22	39	99			
	200										9	19	31	54		
	225										3	12	21	33	66	
	250											6	14	23	37	
	315												3	9	16	29
	400														4	11
	500															

* Standard only side B, optional side A
** Optional flange side C/D
*** Base: Terminal block Phoenix Contact, further see page 90

N **DIN 50262**

A
C D
B

M		Side A/B*	Side C/D**	PG		Side A/B*	Side C/D**
12	17,25	255	323	7	17,25	255	323
16	25,30	115	148	9	21,85	154	199
20	27,60	88	113	11	25,30	115	148
25	37,95	48	62	13,5	27,60	88	113
32	48,30	28	37	16	31,05	76	98
40	60,95	16	20	21	37,95	48	62
50	69,00	14	18	29	48,30	28	37
63	74,75	12	14	36	60,95	16	20
				42	69,00	14	18
				48	74,75	12	14

Ex Stainless steel flange enclosures ProtEx

Type: **Ex e 35.06 10 00** **Ex ia 36.06 10 00** **34.06 10 00**

ATEX h x w x d **762 x 508 x 205 mm** **13930 g**

l in mm	in mm				N				
TS 35									
446	401	M10	•	•	1 (B)				

		1,5	2,5	4	6	10	16	25	35	50	70	95	120	150	185	240
***		1071	861	620	470	315	217	126	126	64	30	30	20	20	17	17
N		11	11	10	10	8	7	5	5	3	2	2	1	1	1	1
A	6															
	10	89	162													
	16	34	61	101												
	20	14	38	64	107											
	25		18	40	64											
	35			12	30	58										
	50				4	24	48	155								
	63					8	27	52								
	80						11	28	47							
	100							13	26	47						
	125								11	25	46					
	160									10	21	38	96			
	200										9	18	30	52		
	225										3	11	20	32	64	
	250											6	14	22	36	
	315												3	8	15	28
	400														4	11
	500															

* Standard only side B, optional side A
** Optional flange side C/D
*** Base: Terminal block Phoenix Contact, further see page 90

N DIN 50262

A
C D
B

M		Side A/B*	Side C/D**	PG		Side A/B*	Side C/D**
12	17,25	201	323	7	17,25	201	323
16	25,30	91	148	9	21,85	122	199
20	27,60	70	113	11	25,30	91	148
25	37,95	38	62	13,5	27,60	70	113
32	48,30	22	37	16	31,05	61	98
40	60,95	12	20	21	37,95	38	62
50	69,00	10	18	29	48,30	22	37
63	74,75	8	14	36	60,95	12	20
				42	69,00	10	18
				48	74,75	8	14

Ex Stainless steel flange enclosures ProtEx

Type: **Ex e 35.06 11 00** **Ex ia 36.06 11 00** **34.06 11 00**

ATEX h x w x d **860 x 640 x 205 mm** **18540 g**

l in mm	in mm				N				
TS 35									
578	533	M10	•	•	1 (B)				

		1,5	2,5	4	6	10	16	25	35	50	70	95	120	150	185	240
***		1612	1300	952	720	459	360	192	192	111	60	60	32	32	28	28
N		13	13	11	11	9	8	5	5	4	3	3	2	2	2	2
A	6															
	10	101	183													
	16	39	69	114												
	20	16	43	72	122											
	25		21	45	73											
	35			14	34	66										
	50				5	27	54	175								
	63					9	30	59								
	80						12	32	54							
	100							15	29	54						
	125								13	28	52					
	160									11	24	43	109			
	200										10	21	34	59		
	225										4	13	23	36	73	
	250											7	16	25	41	
	315												3	10	17	32
	400														4	12
	500															2

* Standard only side B, optional side A
** Optional flange side C/D
*** Base: Terminal block Phoenix Contact, further see page 90

N **DIN 50262**

A
C D
B

M		Side A/B*	Side C/D**	PG		Side A/B*	Side C/D**
12	17,25	250	358	7	17,25	250	358
16	25,30	116	158	9	21,85	154	216
20	27,60	86	126	11	25,30	116	158
25	37,95	48	68	13,5	27,60	86	126
32	48,30	26	38	16	31,05	76	106
40	60,95	16	18	21	37,95	48	68
50	69,00	12	16	29	48,30	26	38
63	74,75	12	16	36	60,95	16	18
				42	69,00	12	16
				48	74,75	12	16

Ex Stainless steel flange enclosures ProtEx

Type: **Ex e 35.06 12 00** **Ex ia 36.06 12 00** **34.06 12 00**

ATEX h x w x d **914 x 610 x 205 mm** **23460 g**

l in mm	in mm								
TS 35									
548	503	M10	•	•	1 (B)				

		1,5	2,5	4	6	10	16	25	35	50	70	95	120	150	185	240
***		1701	1377	1024	776	468	325	208	208	117	62	62	30	30	26	26
N		14	14	12	12	9	8	6	6	4	3	3	2	2	2	2
A	6															
	10	100	181													
	16	38	68	113												
	20	16	42	71	120											
	25		20	44	72											
	35			14	33	65										
	50				5	27	54	173								
	63					9	30	58								
	80						12	31	53							
	100							15	29	53						
	125								13	28	51					
	160									11	24	42	108			
	200										10	20	34	59		
	225										4	13	23	36	72	
	250											7	16	25	40	
	315												3	10	17	31
	400														4	12
	500															2

* Standard only side B, optional side A
** Optional flange side C/D
*** Base: Terminal block Phoenix Contact, further see page 90

N

DIN 50262

A
C D
B

M		Side A/B*	Side C/D**	PG		Side A/B*	Side C/D**
12	17,25	250	358	7	17,25	250	358
16	25,30	116	158	9	21,85	154	216
20	27,60	86	126	11	25,30	116	158
25	37,95	48	68	13,5	27,60	86	126
32	48,30	26	38	16	31,05	76	106
40	60,95	16	18	21	37,95	48	68
50	69,00	12	16	29	48,30	26	38
63	74,75	12	16	36	60,95	16	18
				42	69,00	12	16
				48	74,75	12	16

Ex Stainless steel flange enclosures ProtEx

Type: **Ex e 35.06 13 00** **Ex ia 36.06 13 00** **34.06 13 00**

ATEX h x w x d **980 x 740 x 205 mm** **19040 g**

l in mm	in mm								
TS 35									
678	633	M10	•	•	4 (A/B/C/D)				

	1,5	2,5	4	6	10	16	25	35	50	70	95	120	150	185	240
***	2255	1815	1300	975	600	490	240	240	155	72	72	40	40	34	34
N	15	15	13	13	10	9	6	6	5	3	3	2	2	2	2
A 6															
10	111	201													
16	43	76	125												
20	18	47	79	133											
25		23	49	80											
35			15	37	72										
50				5	30	60	192								
63					10	33	65								
80						13	35	59							
100							16	32	59						
125								14	31	57					
160									12	27	47	119			
200										11	23	37	65		
225										4	14	25	40	80	
250											8	17	28	45	
315												4	11	19	35
400														5	14
500															2

* Standard only side B, optional side A
** Optional flange side C/D
*** Base: Terminal block Phoenix Contact, further see page 90

N **DIN 50262**

A
C D
B

M		Side A/B*	Side C/D**	PG		Side A/B*	Side C/D**
12	17,25	294	402	7	17,25	294	402
16	25,30	134	182	9	21,85	182	244
20	27,60	106	140	11	25,30	134	182
25	37,95	56	76	13,5	27,60	106	140
32	48,30	32	44	16	31,05	86	122
40	60,95	16	24	21	37,95	56	76
50	69,00	16	20	29	48,30	32	44
63	74,75	12	16	36	60,95	16	24
				42	69,00	16	20
				48	74,75	12	16

Ex Stainless steel flange enclosures ProtEx

Dimensions

Type: **34./35./36.06 02 00**

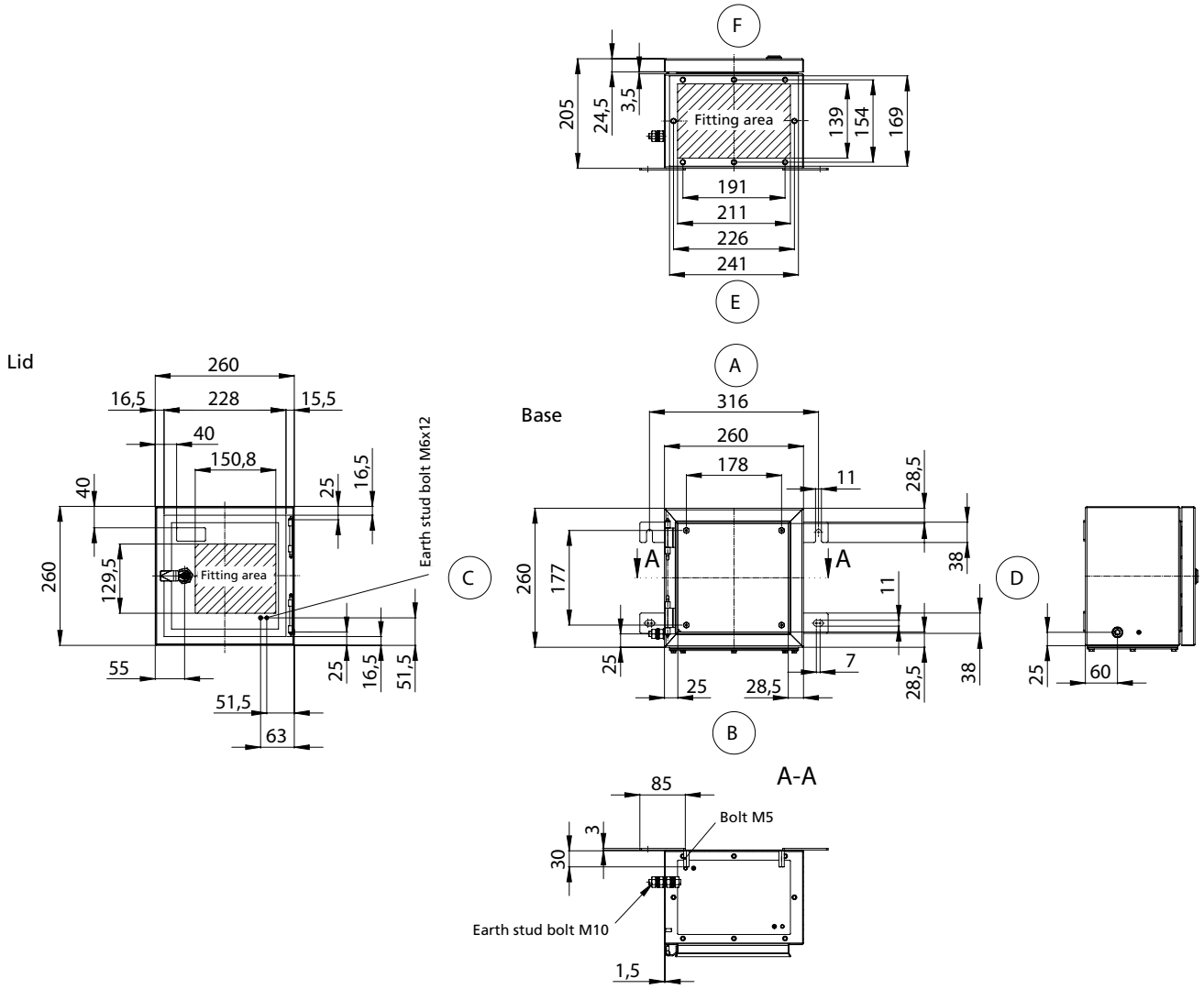

Flange dimensions

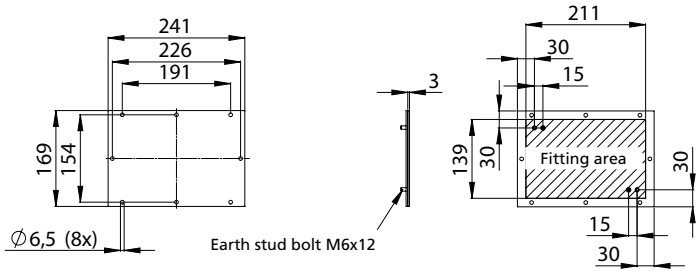

Download detail drawings: www.rose-ex-enclosures.com

Ex Stainless steel flange enclosures ProtEx

Dimensions

Type: **34./35./36.06 03 00**

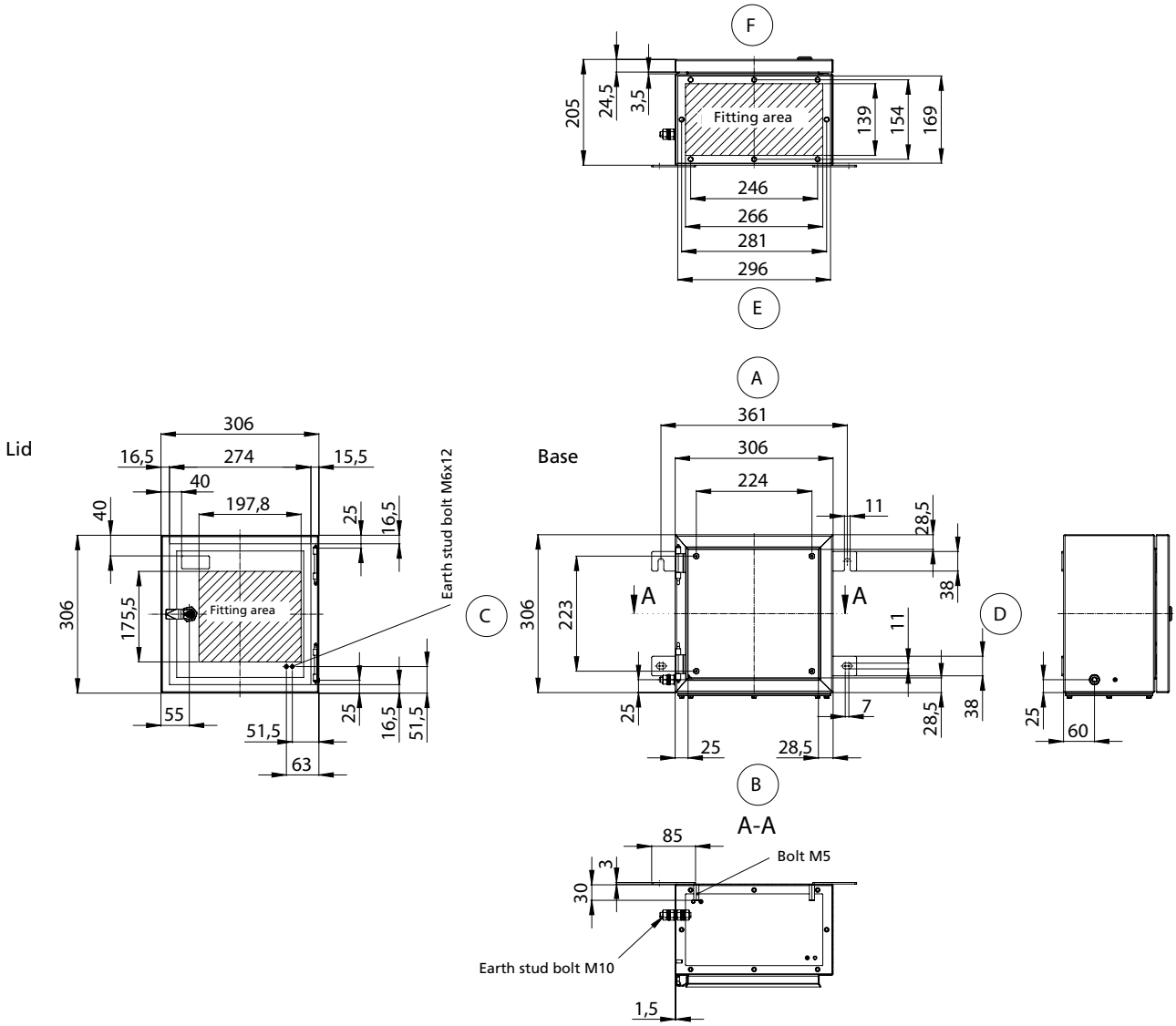

Flange dimensions

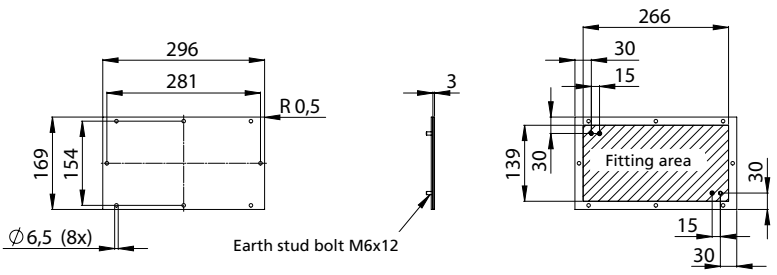

Ex Stainless steel flange enclosures ProtEx

Dimensions

Type: **34./35./36.06 04 00**

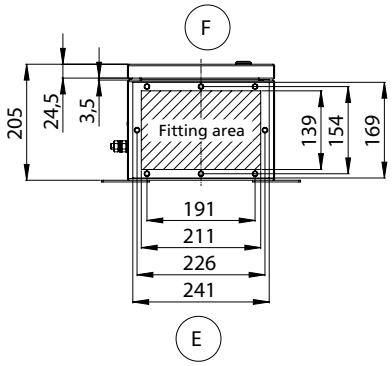

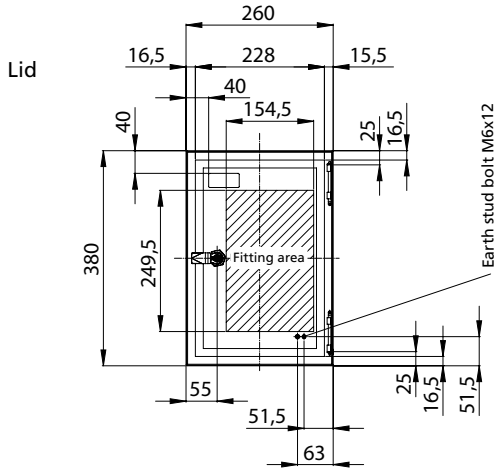

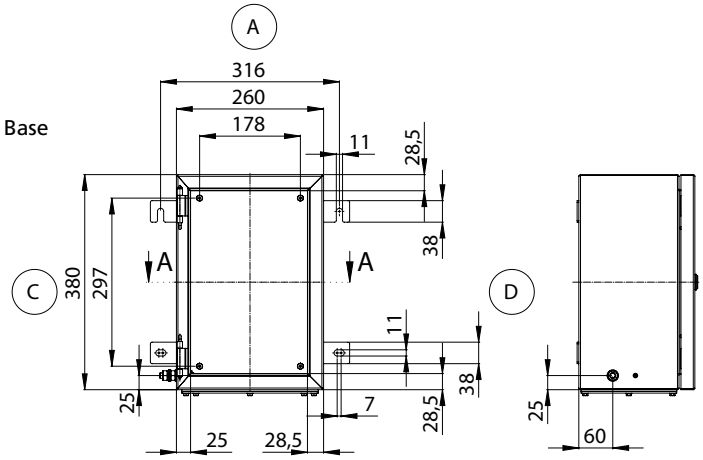

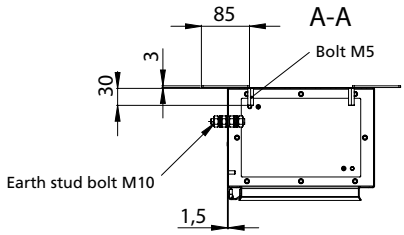

Flange dimensions

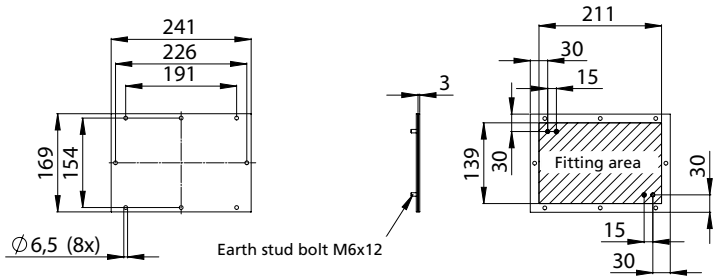

Ex Stainless steel flange enclosures ProtEx

Dimensions

Type: **34./35./36.06 05 00**

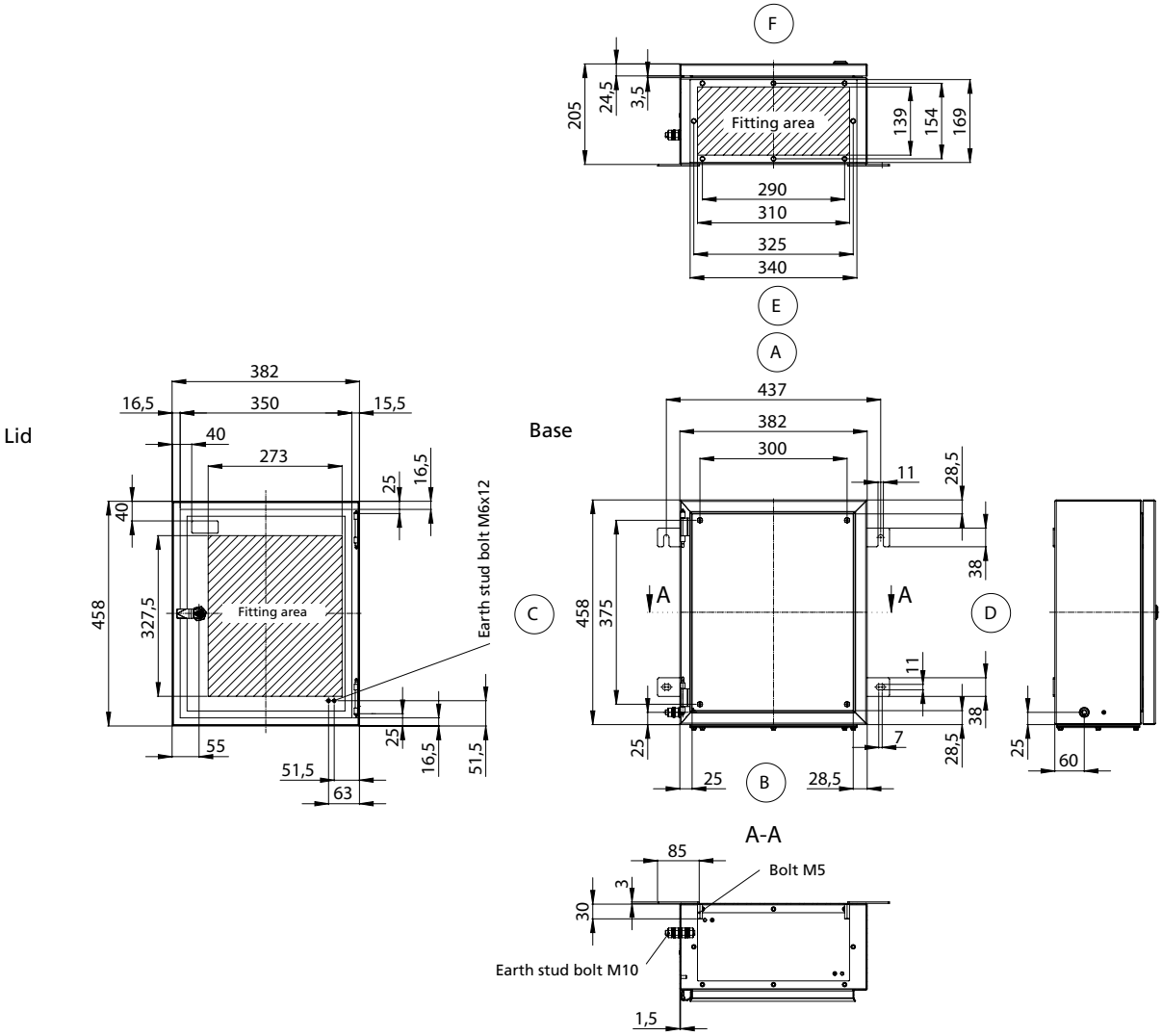

Flange dimensions

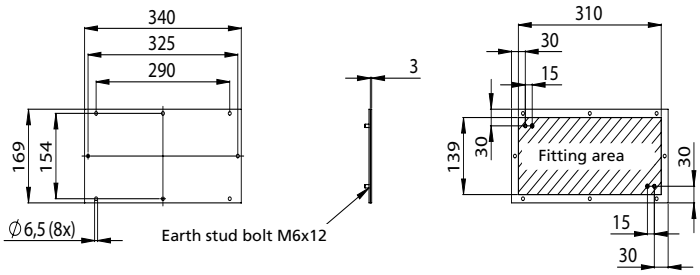

Ex Stainless steel flange enclosures ProtEx

Dimensions

Type: **34./35./36.06 06 00**

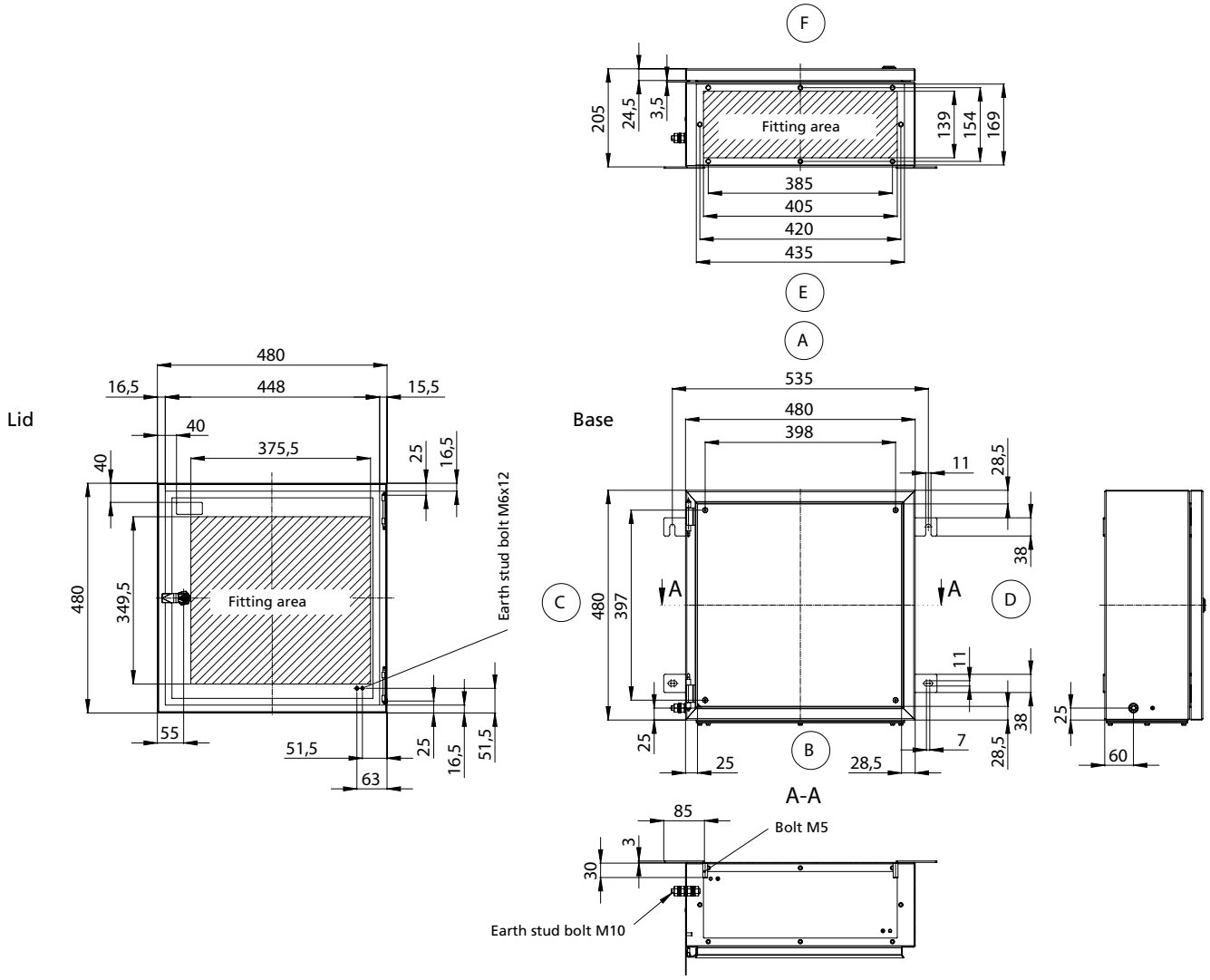

Flange dimensions

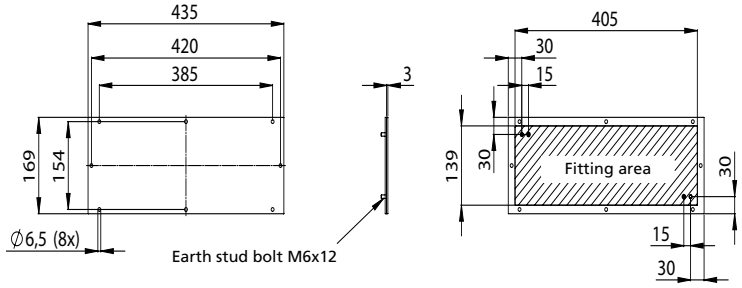

Ex Stainless steel flange enclosures ProtEx

Dimensions

Type: **34./35./36.06 07 00**

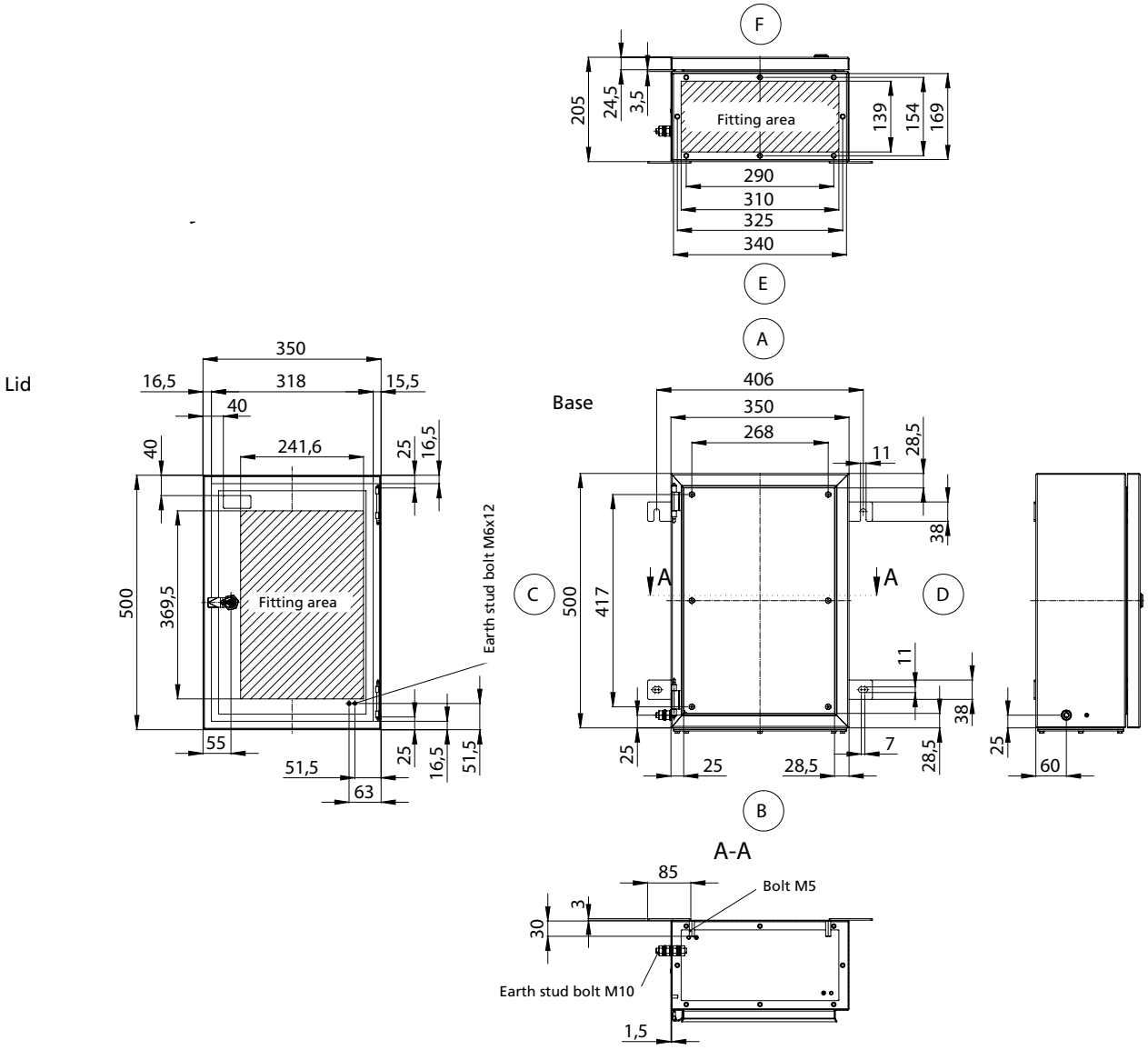

Flange dimensions

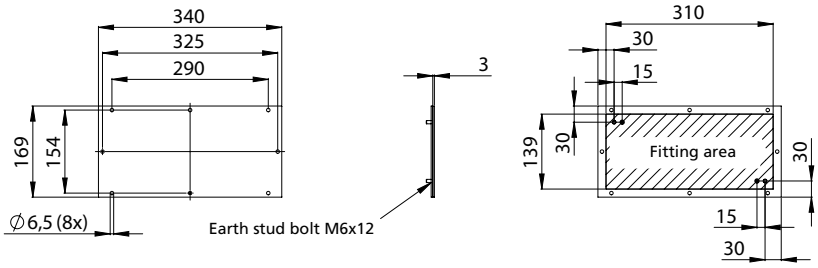

Ex Stainless steel flange enclosures ProtEx

Dimensions

Type: **34./35./36.06 08 00**

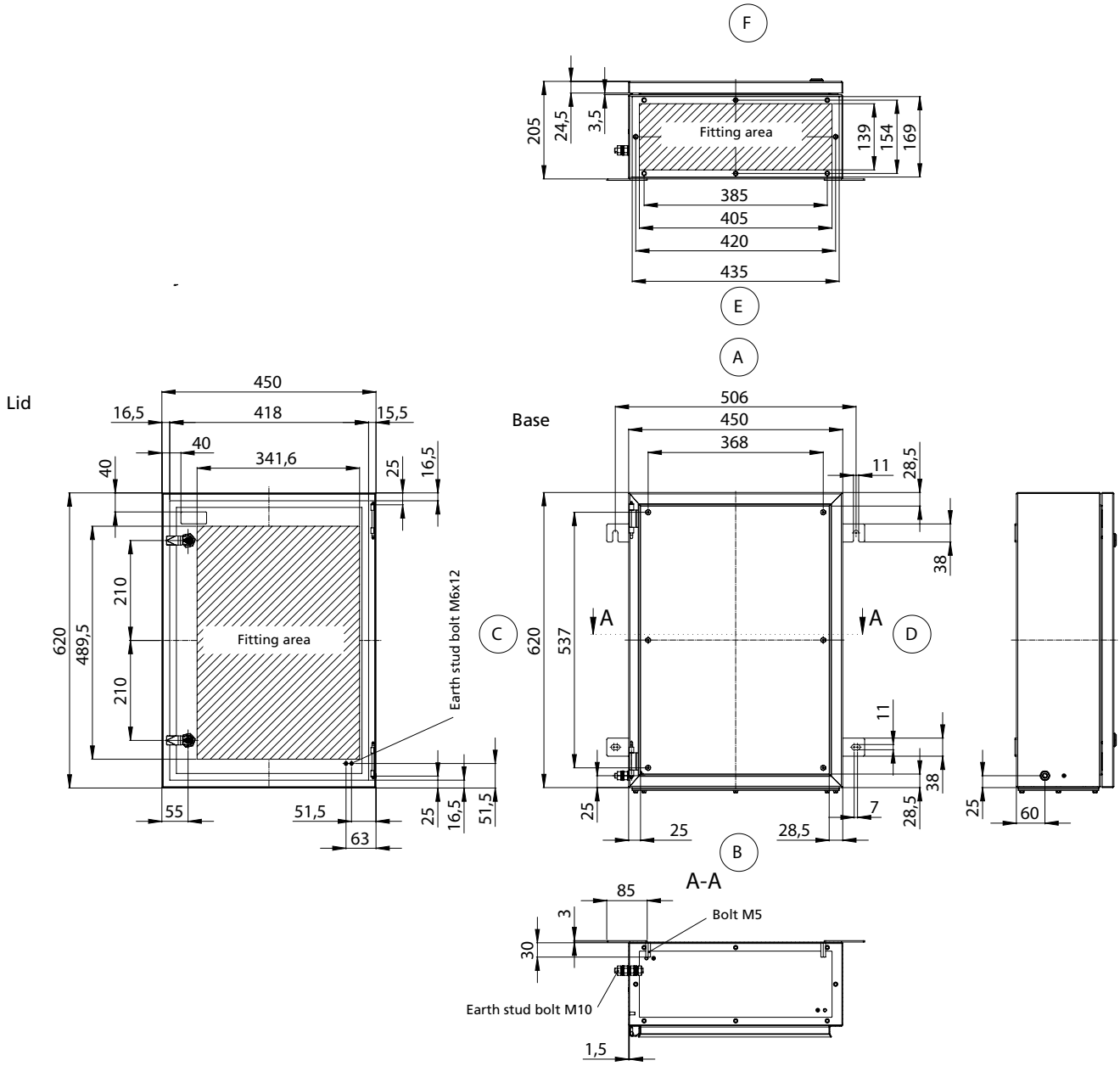

Flange dimensions

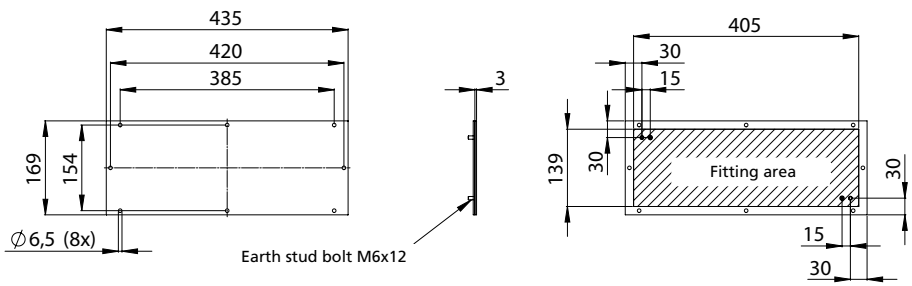

Ex Stainless steel flange enclosures ProtEx

Dimensions

Type: **34./35./36.06 09 00**

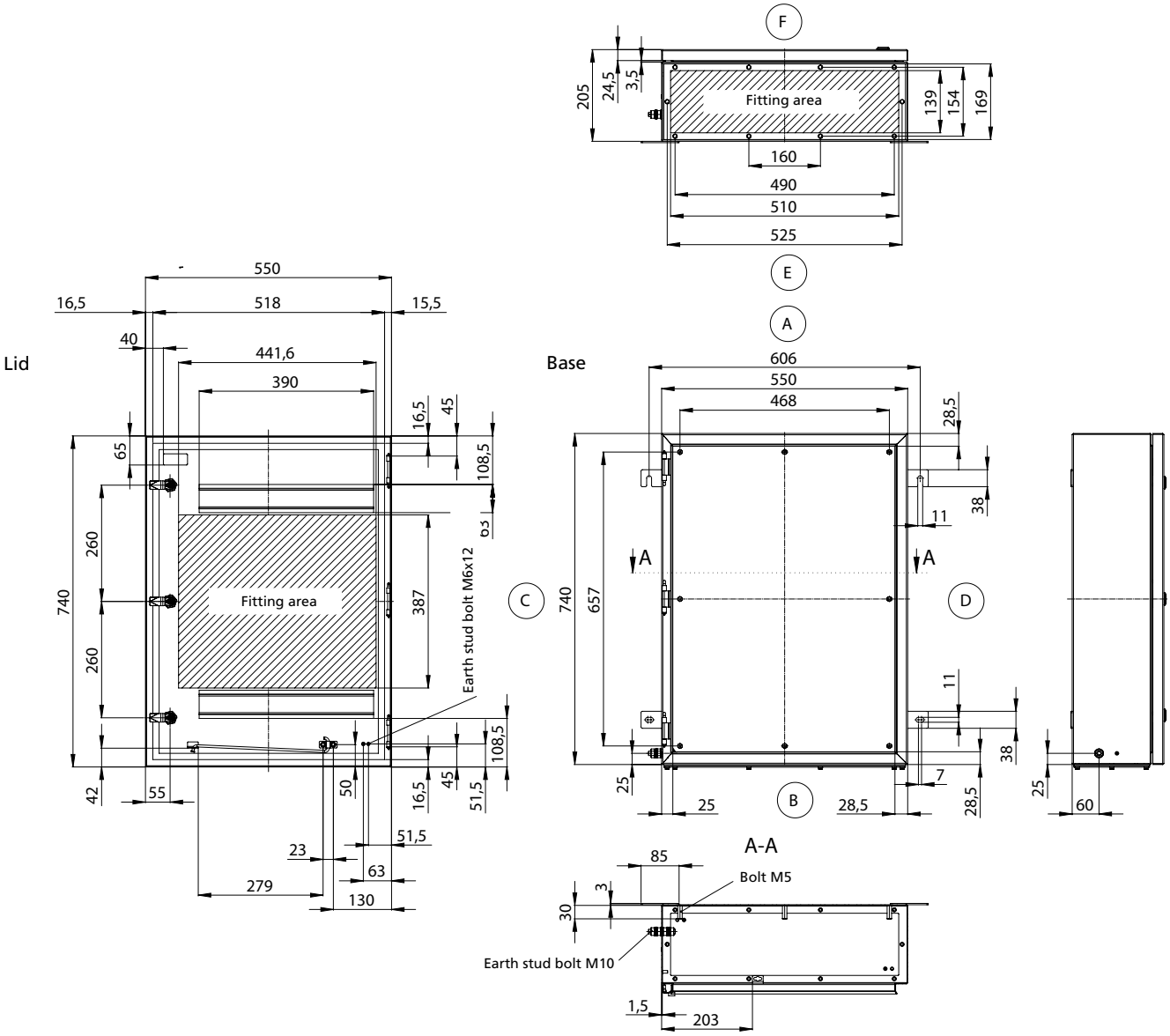

Flange dimensions

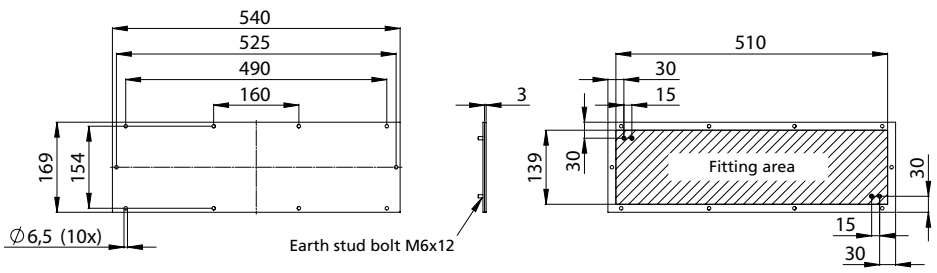

Dimensions

Type: **34./35./36.06 10 00**

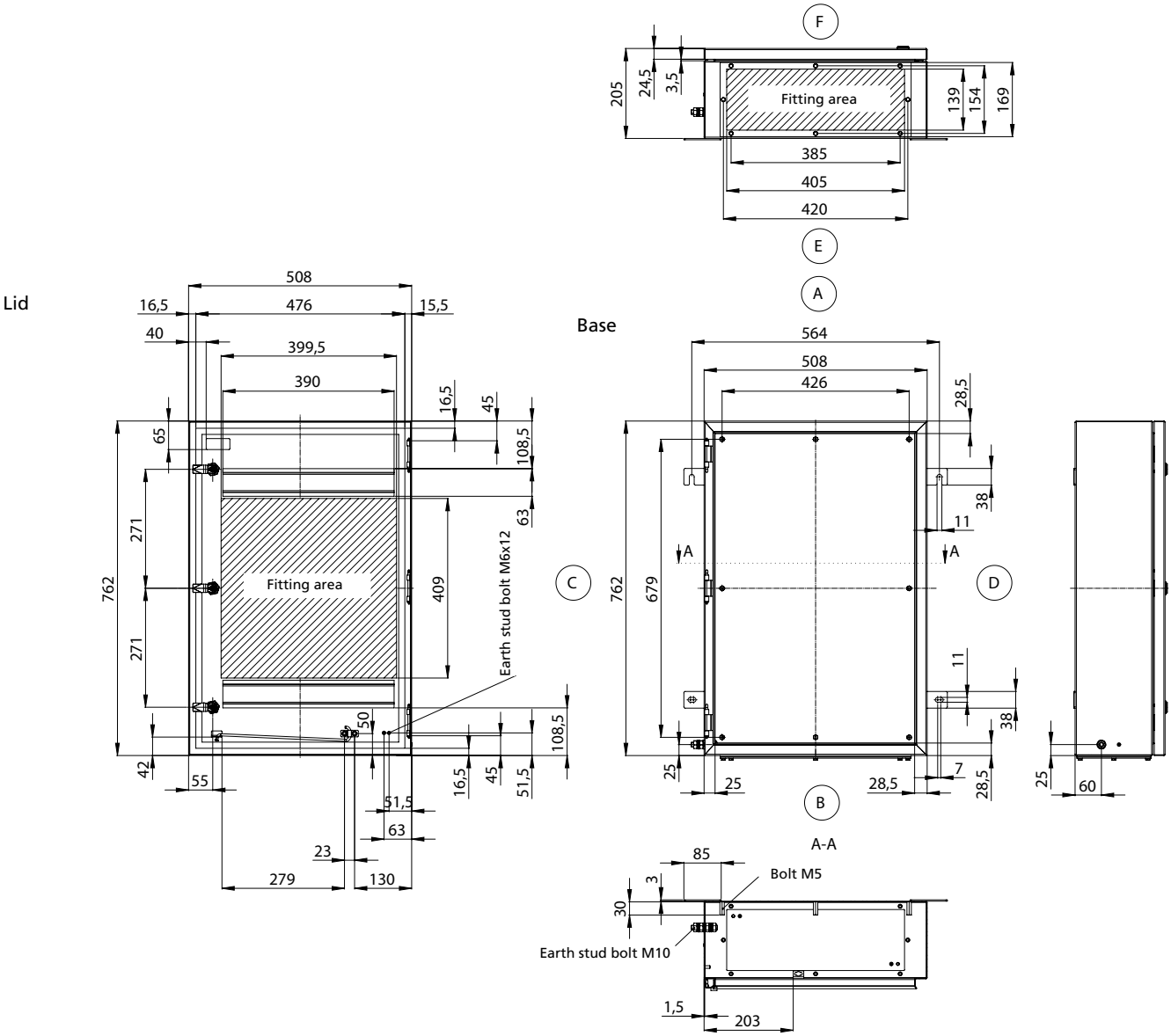

Flange dimensions

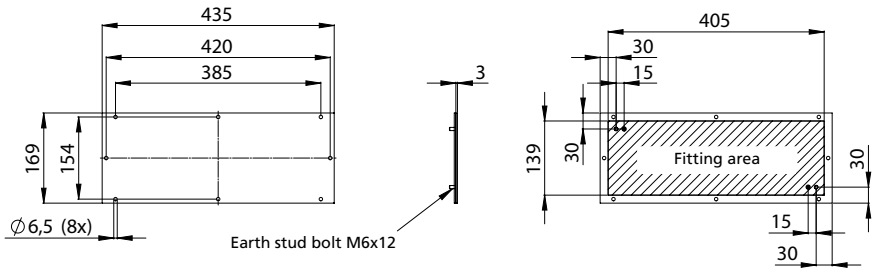

Ex Stainless steel flange enclosures ProtEx

Dimensions

Type: **34./35./36.06 11 00**

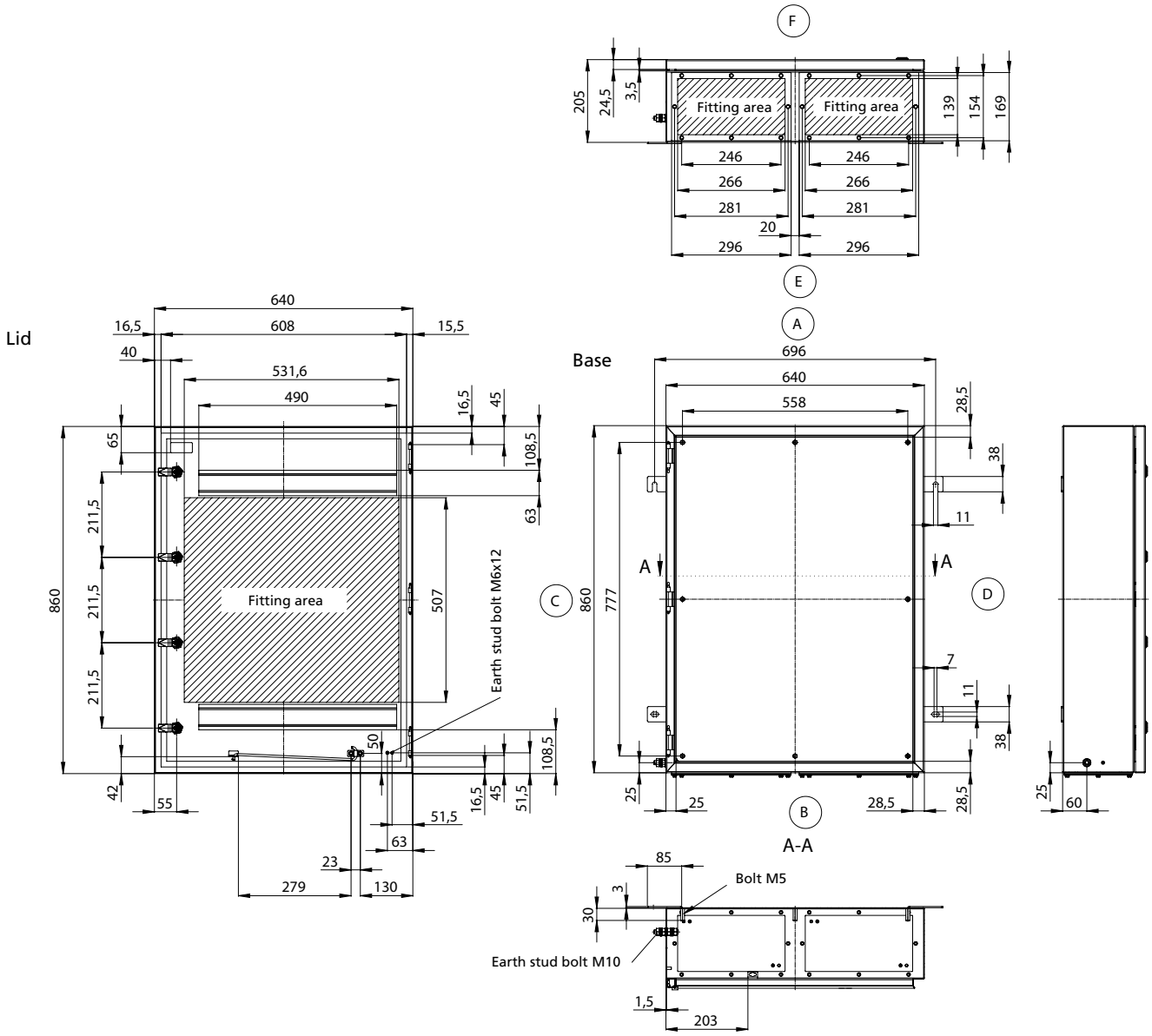

Flange dimensions

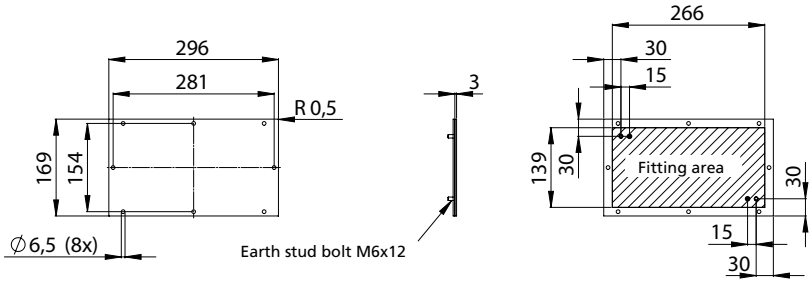

Dimensions

Type: **34./35./36.06 12 00**

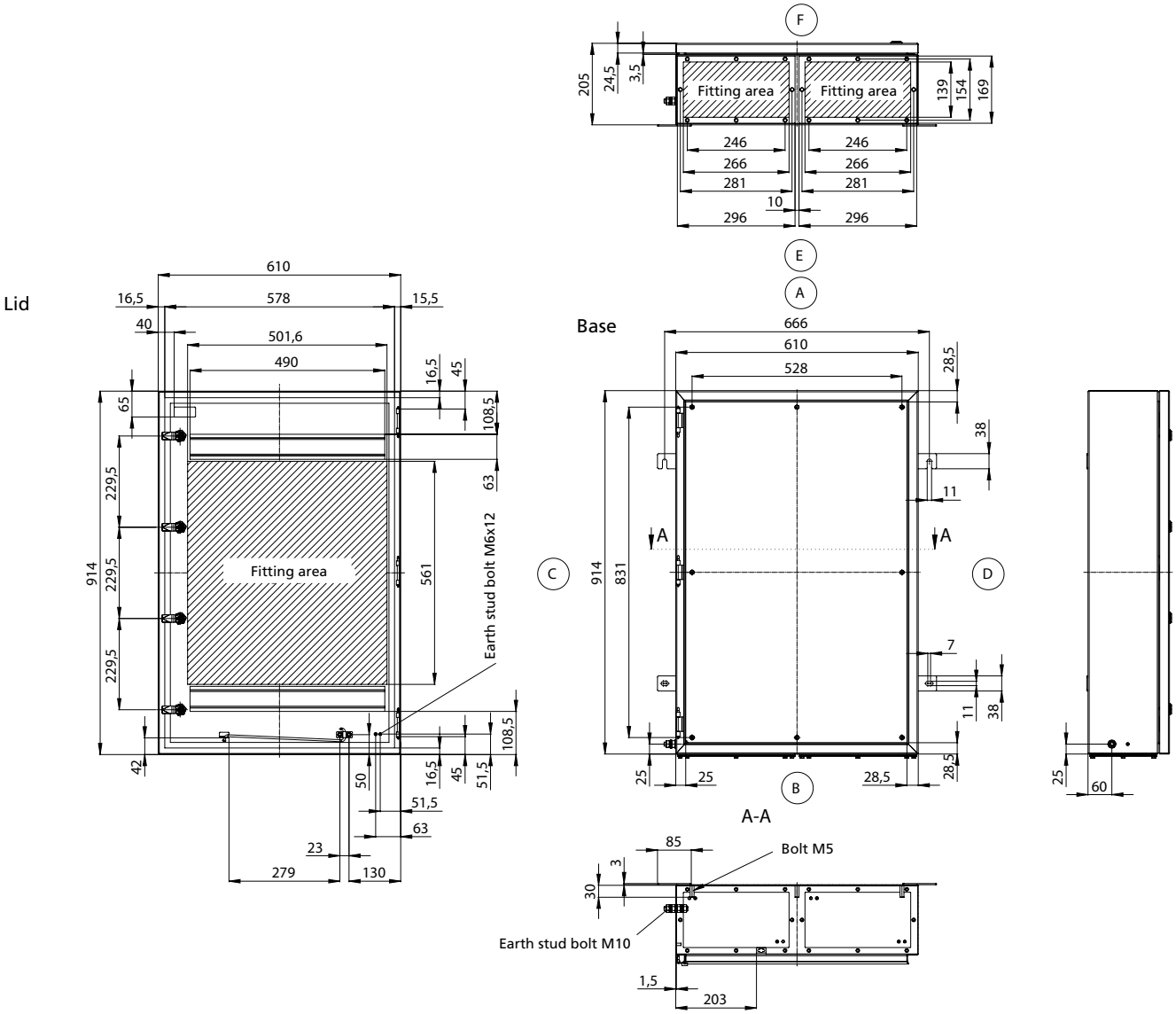

Flange dimensions

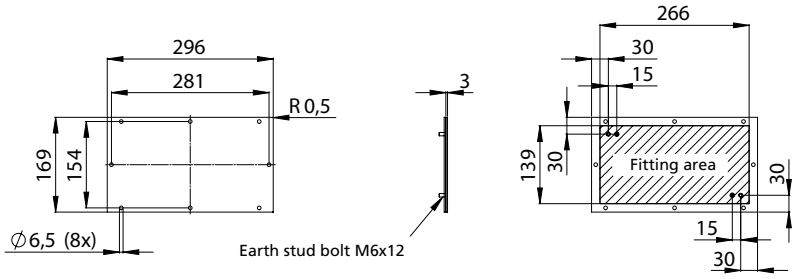

Ex Stainless steel flange enclosures ProtEx

Dimensions

Type: **34./35./36.06 13 00**

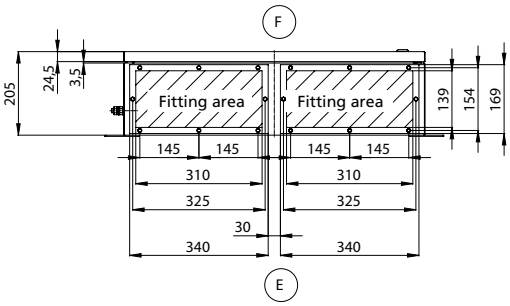

Lid

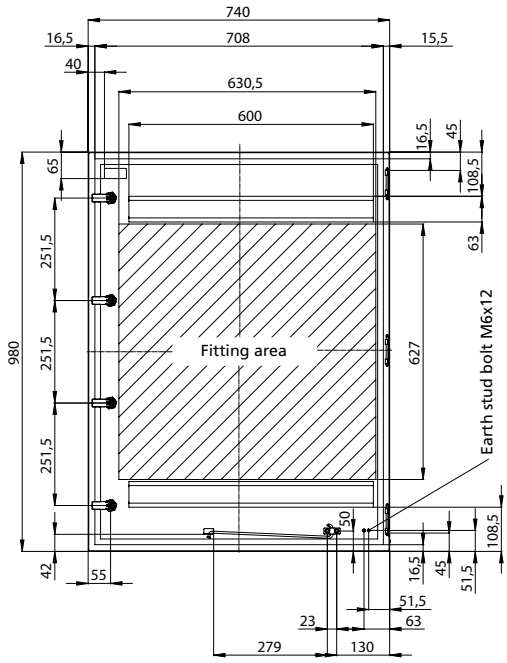

Base

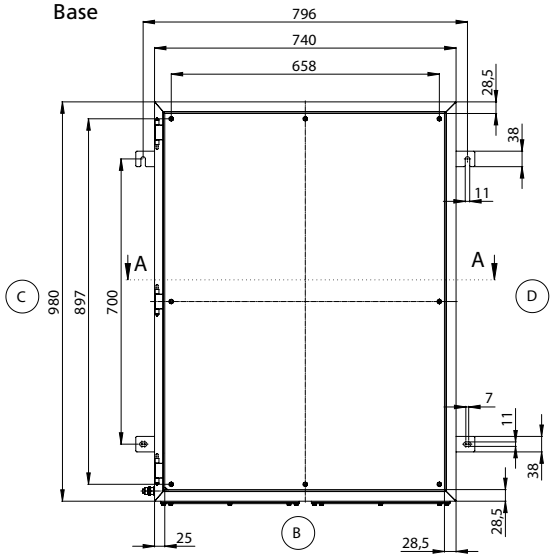

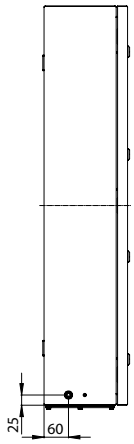

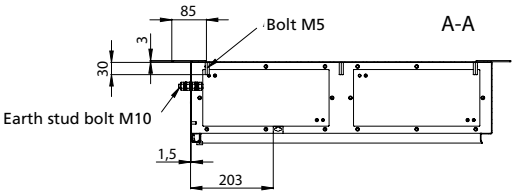
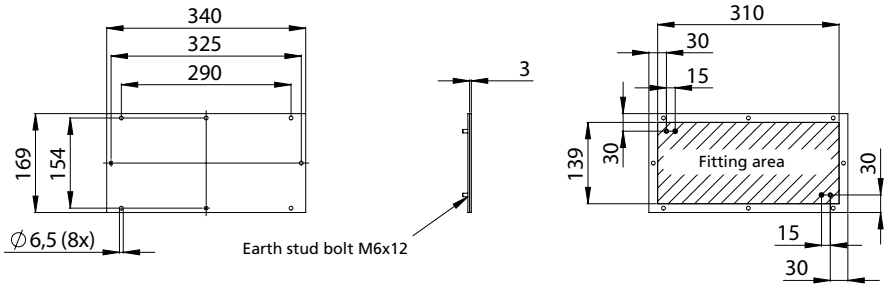
Flange dimensions